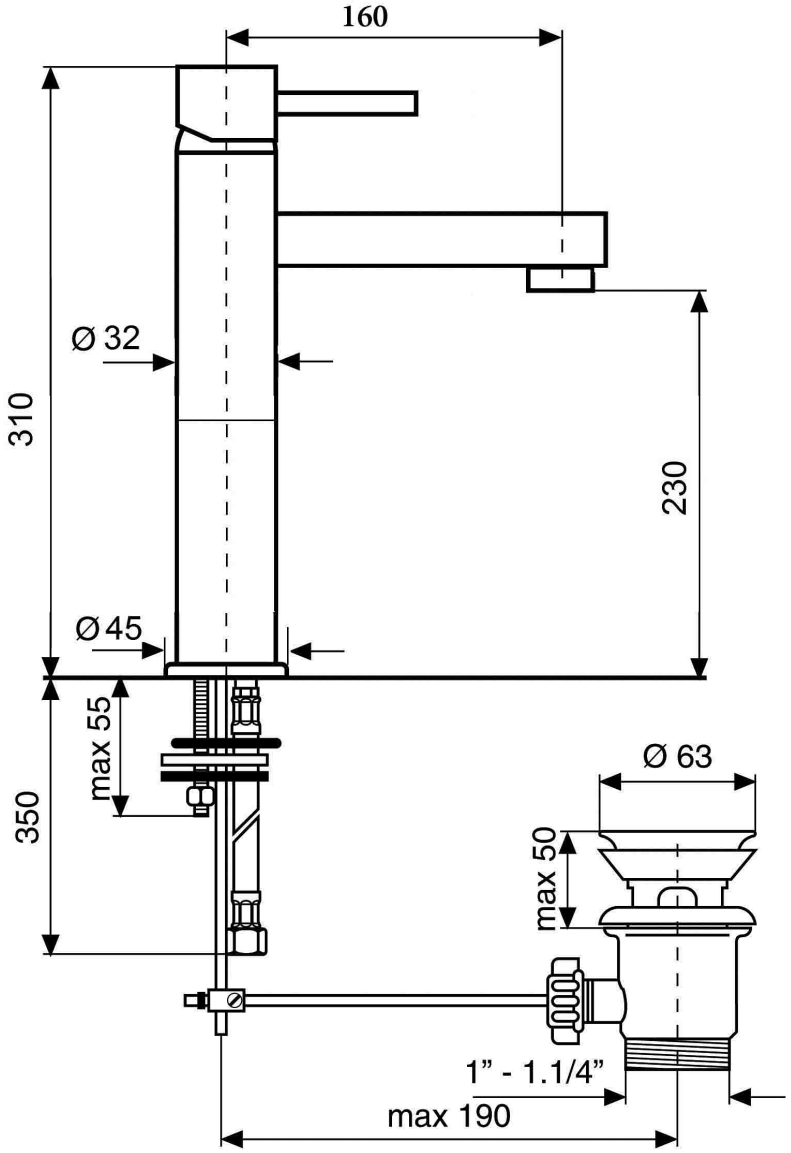Art. TDSL 0234